Problem I

Name	Variable	Units	Equation
work/energy	w	J	N/R
power	p	W	$v \cdot i$
charge	q	C	N/R
voltage	v	V	dw/dq
current	i	A	dq/dt
conductance	G	S	N/R
resistance	R	Ω	v/i

Problem II

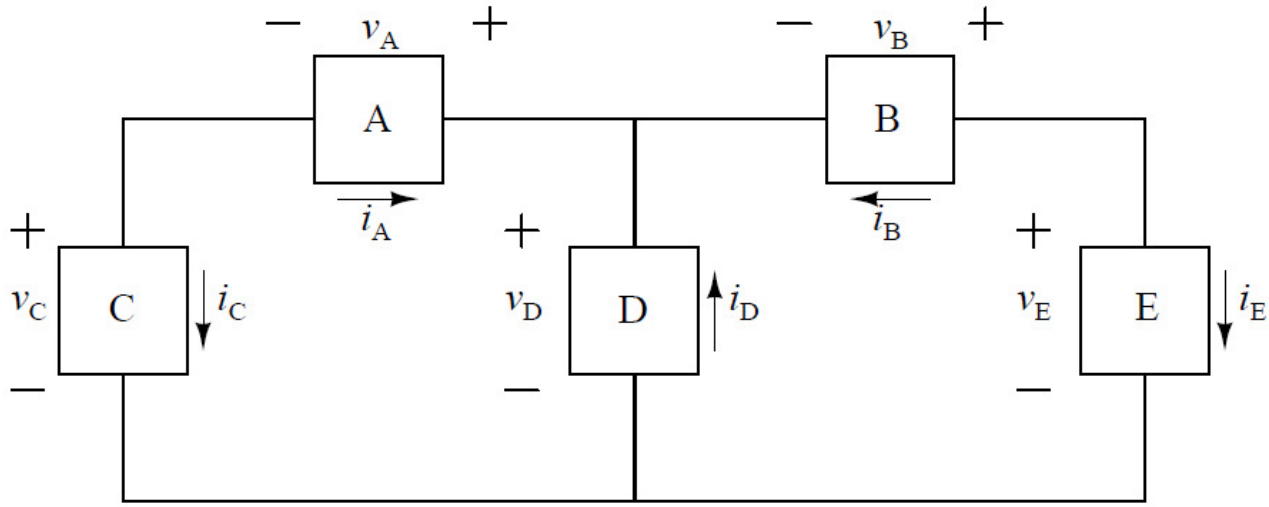

Element	Conv.	Voltage v, V	Current i, A	Power Absorbed p_{abs}, W
A	A	10 (= −P/i) ②	−3 (= −i_C) ①	30
B	P	−8 ($-v_D - v_B + v_E = 0$, $v_B = v_E - v_D$) ④	−2	16 (= v·i) ⑤
C	P	2 ($-v_C - v_A + v_D = 0$, $v_C = v_D - v_A$) ④	3	6 (= v·i) ⑤
D	A	12 (= −P/i) ③	5 (= $i_C + i_E$ or $-(i_A + i_B)$) ②	−60
E	P	4	2 (= −i_B) ①	8 (= v·i) ②

CONVENTION: + $\xrightarrow{P_i}$ − + $\xleftarrow{A}$ −

$$\Sigma p_{abs} = 30 + 16 + 6 - 60 + 8 = 0 \checkmark$$

ⓝ indicates when solved;
group ① needed to solve ②, etc.

Problem III - lazy

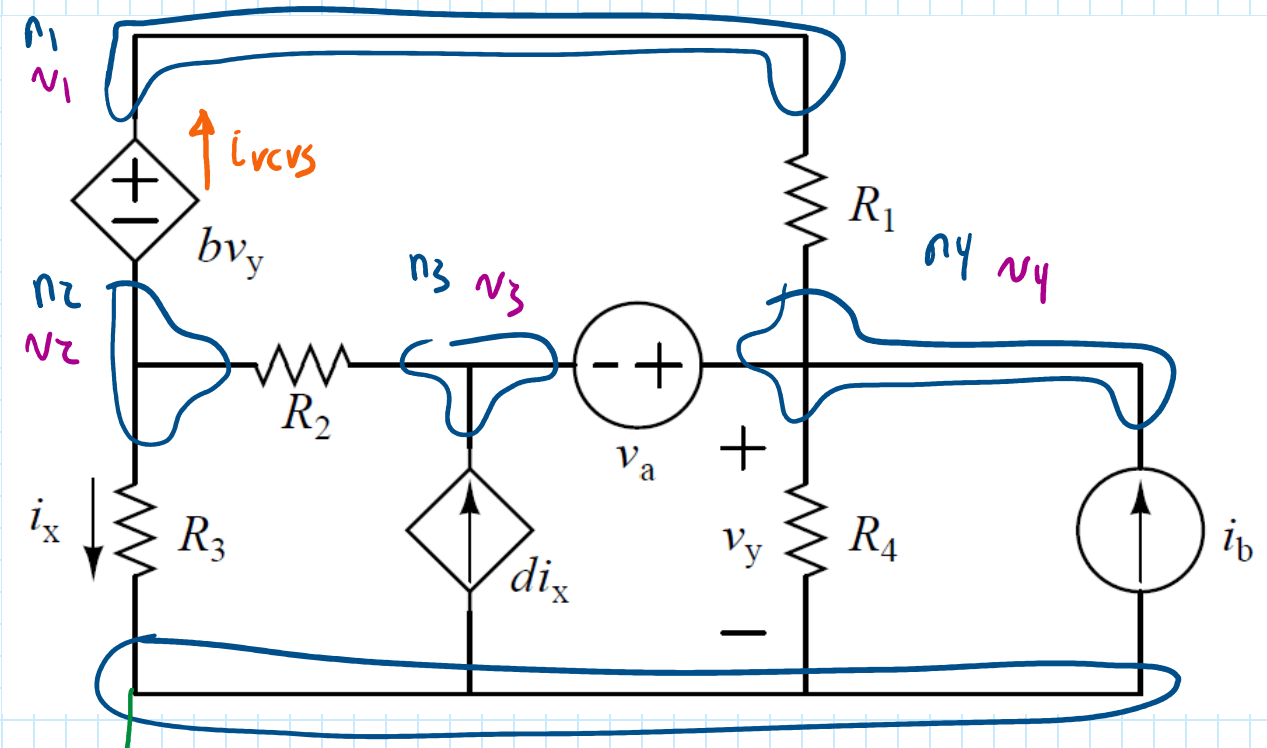

LAZY LABELS: UNK = v_1 v_2 v_3 v_4 v_y i_x

KCL = 5 nodes − 1 − 2 v. src = 2

KCL, sn_{12}: $\frac{v_2-0}{R_3} + \frac{v_2-v_3}{R_2} + \frac{v_1-v_4}{R_1} = 0$

KCL, sn_{34}: $\frac{v_3-v_2}{R_2} - di_x + \frac{v_4-v_1}{R_1} + \frac{v_4-0}{R_4} - i_b = 0$

SRC, v_a: $v_a = v_4 - v_3$

SRC, VCVS: $bv_y = v_1 - v_2$

MEAS, v_y: $v_y = v_4$

MEAS, i_x: $i_x = v_2 / R_3$

$P_{abs,R_2} = (v_2 - v_3)^2 / R_2$

$P_{del,cccs} = (v_3 - 0)\, di_x$

$P_{del,vcvs} = b v_y i_{vcvs}$ $\quad i_{vcvs} = (v_1 - v_4)/R_1$

Problem III - really smart

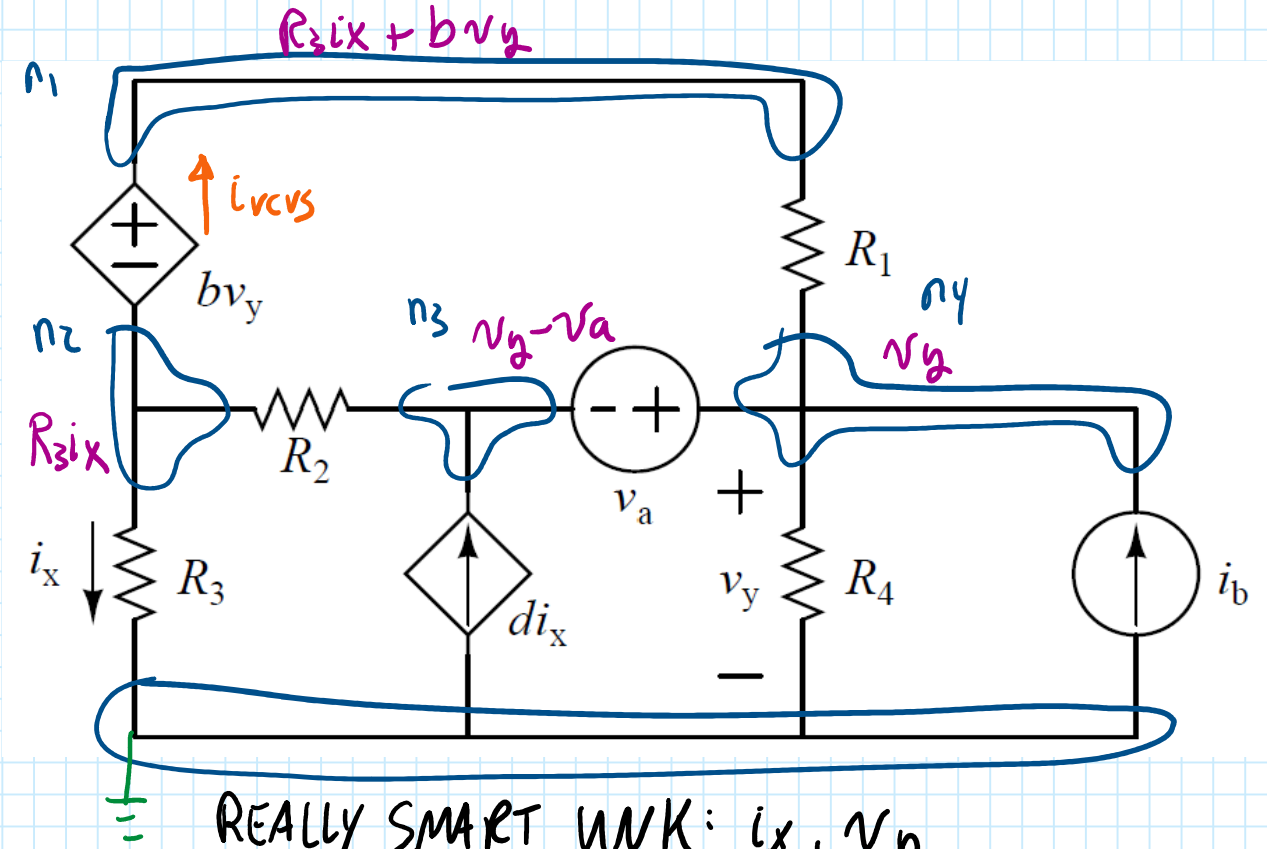

REALLY SMART UNK: i_x, v_y

$\#KCL = 5\text{ nodes} - 1 - 2\text{ v. src} = 2$

KCL, Sn_{12}: $i_x + \dfrac{R_3 i_x - (v_y - v_a)}{R_2} + \dfrac{(R_3 i_x + b v_y) - v_y}{R_1} = 0$

KCL, Sn_{34}: $\dfrac{(v_y - v_a) - R_3 i_x}{R_2} - d i_x + \dfrac{v_y}{R_4} - i_b + \dfrac{v_y - (R_3 i_x + b v_y)}{R_1} = 0$

$P_{abs,R_2} = (R_3 i_x - (v_y - v_a))^2 / R_2$

$P_{del,ccs} = (v_y - v_a)\, d i_x$

$P_{del,vcvs} = b v_y i_{vcvs}$ $\quad i_{vcvs} = \dfrac{R_3 i_x + b v_y - v_y}{R_1}$

Problem IV - MCM

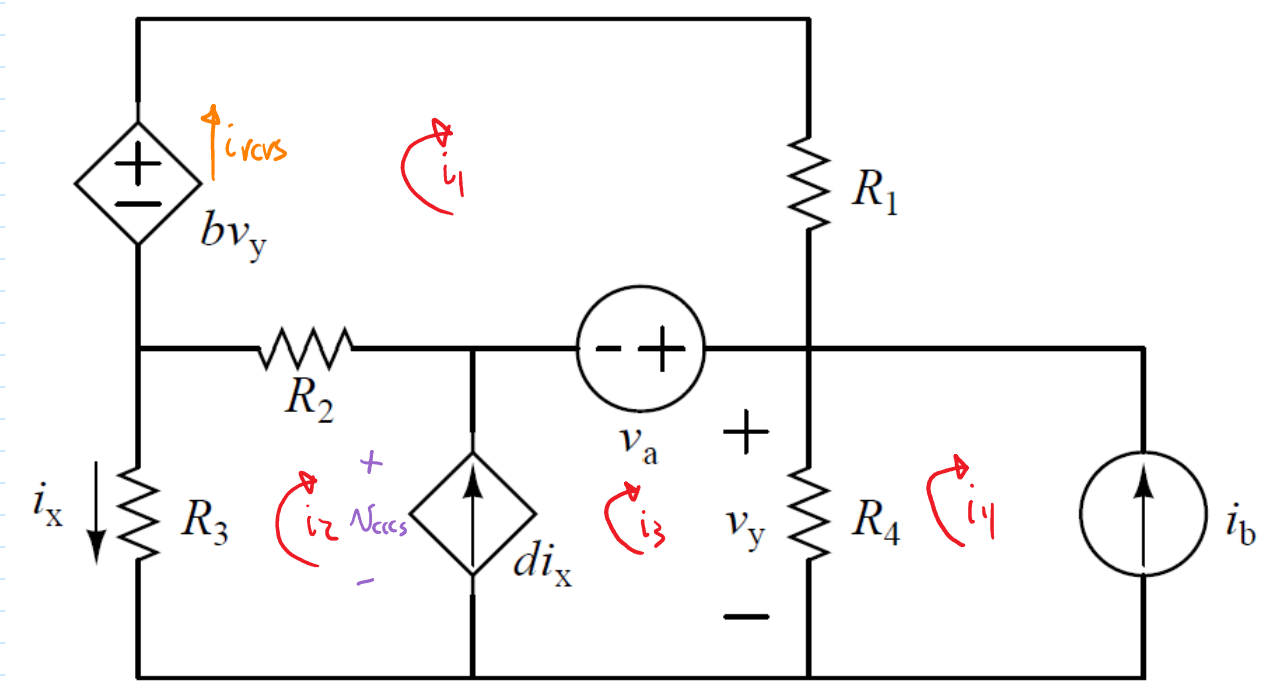

KVL = 4 mesh - 2 isrc = 2

KVL, l_1: $-bv_y + R_1 i_1 + v_a + R_2(i_1 - i_2) = 0$

KVL, sl_{23}: $R_3 i_2 + R_2(i_2 - i_1) - v_a + R_4(i_3 - i_4) = 0$

SRC, i_b: $i_b = -i_4$ SRC$_{cccs}$: $di_x = i_3 - i_2$

MEAS, i_x: $i_x = -i_2$ MEAS, v_y: $v_y = R_4(i_3 - i_4)$

$P_{abs,R_2} = R_2(i_2 - i_1)^2$

$P_{del,cccs} = v_{cccs}\, di_x$ $v_{cccs} = v_y - v_a = R_3 i_x + R_2(i_1 - i_2) = -R_3 i_2 + R_2(i_1 - i_2)$

$P_{del,vcvs} = bv_y\, i_1$

Problem IV - BCM

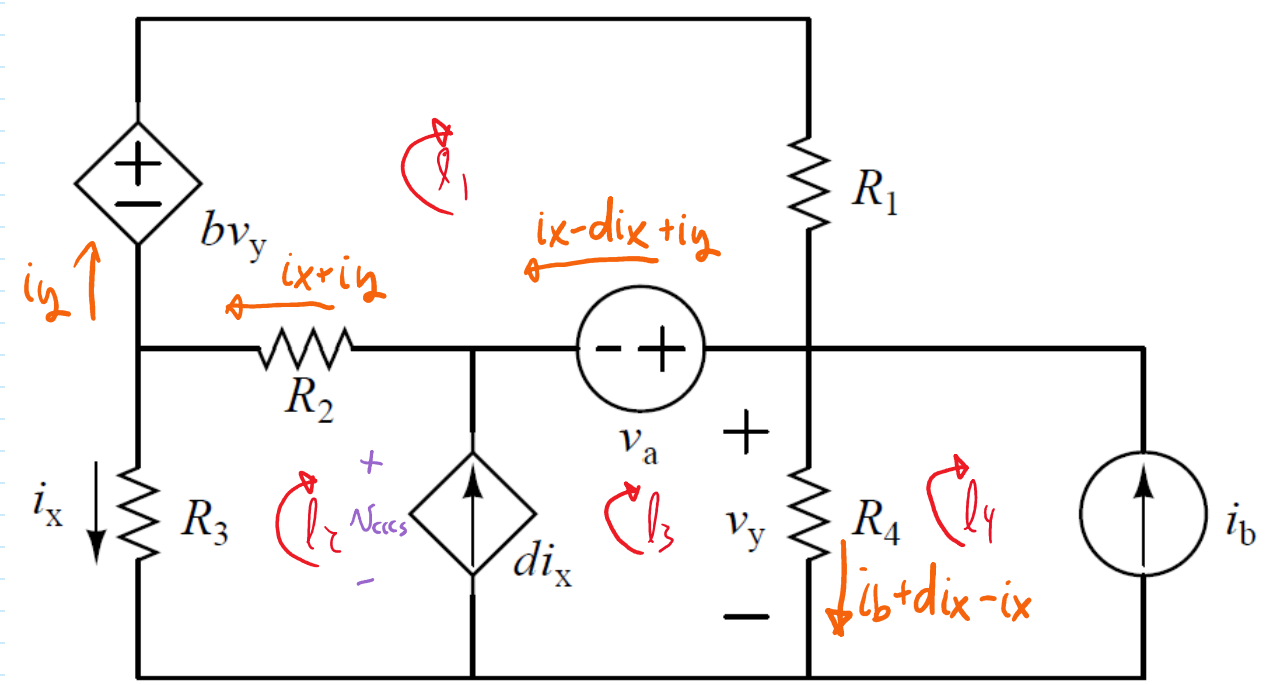

KVL = 4 mesh - 2 isrc = 2 UNK: i_x i_y v_y

KVL, l_1: $-bv_y + R_1 i_y + v_a + R_2(i_x + i_y) = 0$

KVL, sl23: $-R_3 i_x - R_2(i_x + i_y) - v_a + v_y = 0$

MEAS: $v_y = R_4(i_b + di_x - i_x)$

$P_{abs,R_2} = (i_x + i_y)^2 R_2$

$P_{del,ccvs} = v_{ccvs}\, di_x$ $v_{ccvs} = v_y - v_a = R_3 i_x + R_2(i_x + i_y)$

$P_{del,vcvs} = bv_y\, i_y$

Problem V

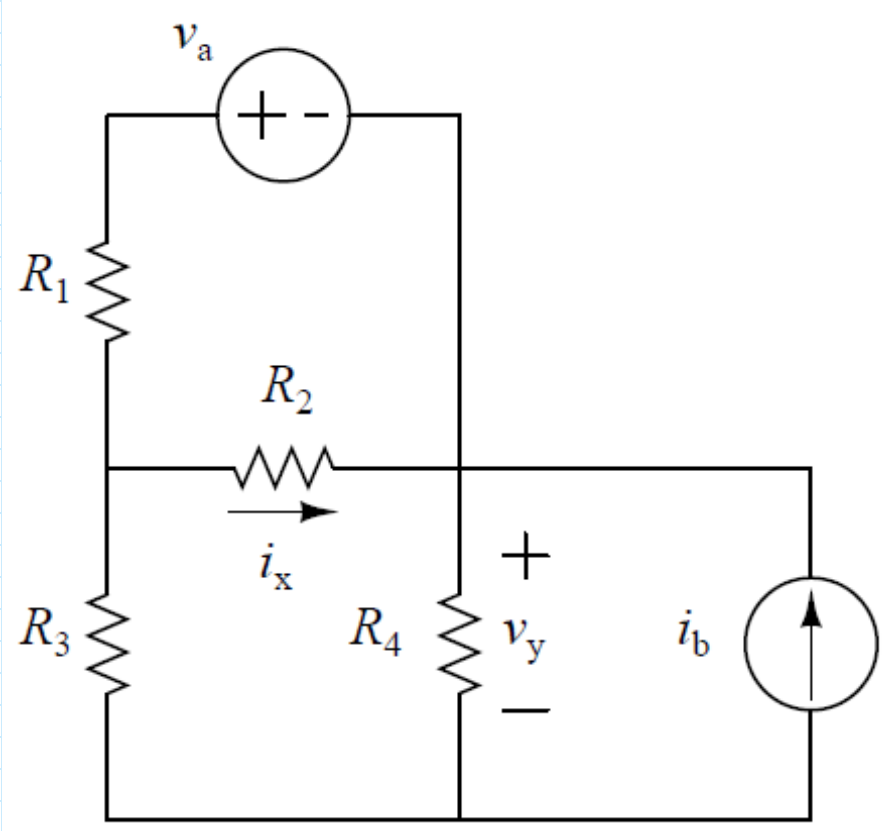

v_a:

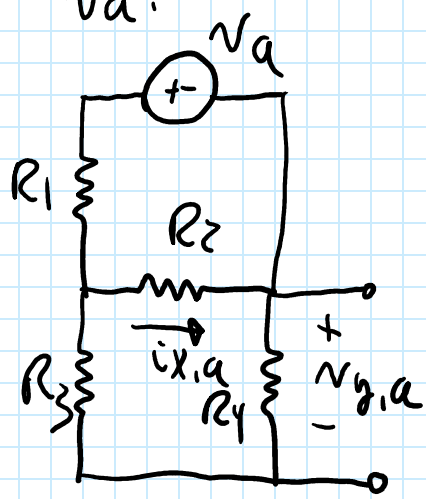

i_b

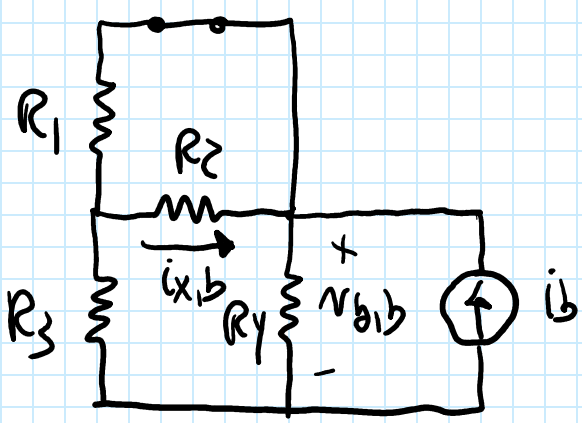

$$R_{eq} = R_1 + (R_2 \| (R_3 + R_4))$$

$$v_{y,a} = \frac{v_a (R_2 \| (R_3 + R_4))}{R_{eq}} \frac{R_4}{R_3 + R_4}$$

$$i_{x,a} = \frac{v_a (R_2 \| (R_3 + R_4))}{R_{eq}} \frac{1}{R_2}$$

$$R_{eq} = R_4 \| ((R_1 \| R_2) + R_3)$$

$$v_{y,b} = i_b R_{eq}$$

$$i_{x,b} = \frac{-i_b R_{eq}}{(R_1 \| R_2) + R_3} \frac{R_1 \| R_2}{R_2}$$

Problem VI

v_{oc}:

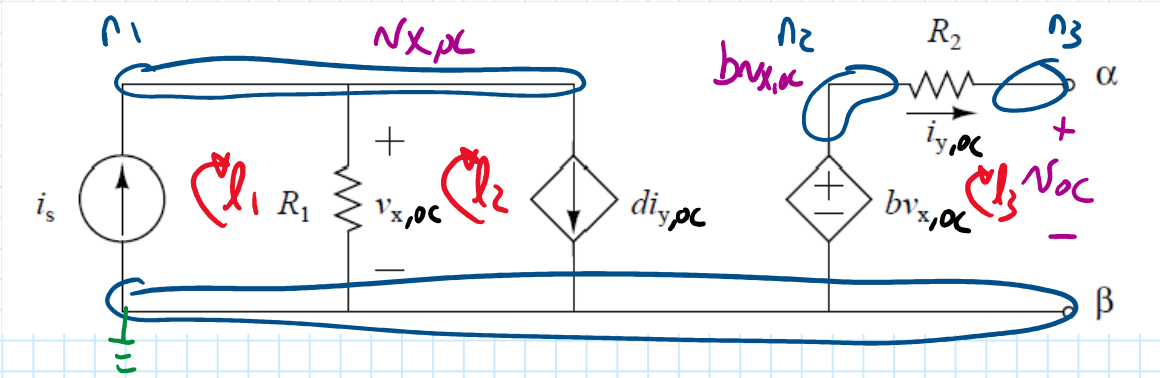

$i_{y,oc} = 0$ due to open circuit.

KCL, n_1: $-i_s + \frac{v_{1,oc}}{R_1} + d\cancel{i_{y,oc}}^{\to 0} = 0$ $\quad v_{x,oc} = R_1 i_s$

KVL, l_3: $-bv_{x,oc} + R_2 \cancel{i_{y,oc}}^{\to 0} + v_{oc} = 0$

$v_{oc} = bv_{x,oc} = bR_1 i_s$

i_{sc}:

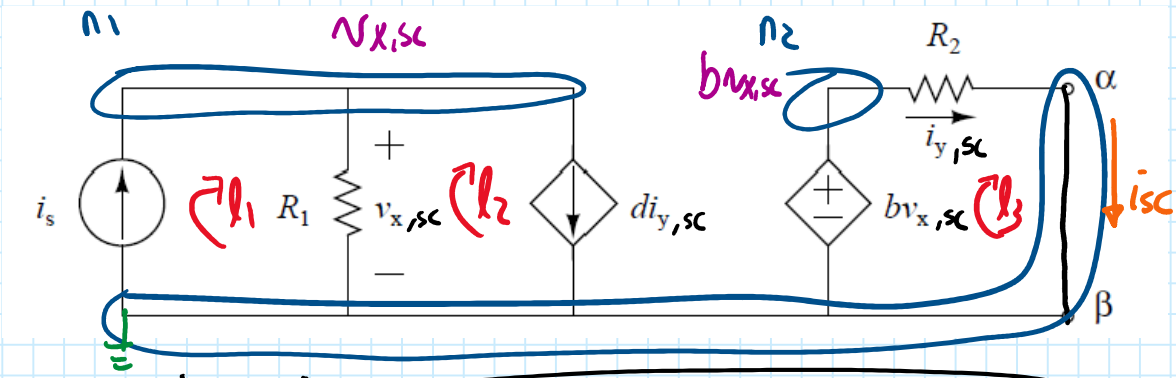

$i_{y,sc} = i_{sc}$

KVL, l_3: $-bv_{x,sc} + R_2 i_{sc} = 0$ $\quad v_{x,sc} = \frac{R_2}{b} i_{sc}$

KCL, n_1: $-i_s + \frac{v_{x,sc}}{R_1} + d\, i_{y,sc} = 0$

$-i_s + \frac{R_2}{bR_1} i_{sc} + d\, i_{sc} = 0$ $\quad i_{sc} = \frac{i_s}{\frac{R_2}{bR_1} + d} = \frac{bR_1 i_s}{bR_1 d + R_2}$

$R_{Th} = \frac{v_{oc}}{i_{sc}} = \frac{bR_1 i_s}{} \cdot \frac{bR_1 d + R_2}{bR_1 i_s} = bR_1 d + R_2$

Th:

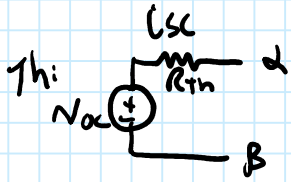

N:

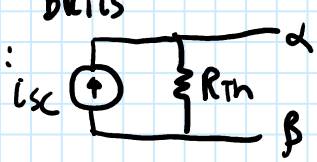

(2) $R_L = R_{Th}$

$p_{max} = \frac{v_{oc}^2}{4R_{Th}} = \frac{i_{sc}^2 R_{Th}}{4}$ q

Problem VI - extra

NOTE: CAN FIND R_{Th} USING TEST:
$i_s \to$ OPEN CKT.

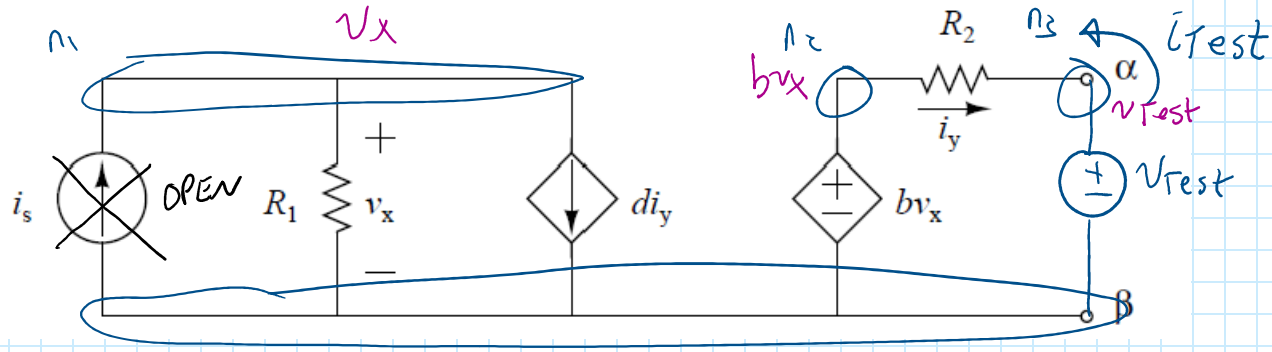

KCL, n_1: $\frac{v_x}{R_1} + d i_y = 0$ $\quad v_x = -d R_1 i_y$

KVL, right: $-b v_x + R_2 i_y + v_{Test} = 0$

$i_y = -i_{Test}$, $\quad v_x = d R_1 i_{Test}$

$$-b(d R_1 i_{Test}) - R_2 i_{Test} + v_{Test} = 0$$

$$v_{Test} = (b d R_1 + R_2) i_{Test}$$

$$R_{Th} = \frac{v_{Test}}{i_{Test}} = b d R_1 + R_2 \quad \checkmark$$