1

(1) $A \to \infty \quad r_i \to \infty \quad r_o \to 0$

(2) $\frac{2}{5}\frac{dy}{dt} + y = -3 \quad \tau = 2/5 \quad y_f = -3 \quad y_i = 10$

$y = -3 + 13e^{-t/0.4}$

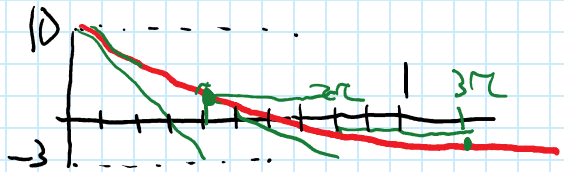

(3) $4\angle -35^\circ + 5\angle -8^\circ = 8.754\angle -19.97 \to 8.754\cos(160t - 20^\circ)$

(4) CAP: $R + \frac{1}{j\omega C} = 2000 - j4000 \quad R = 2000 \quad C = \frac{1}{4000\omega} = 250nF$

CAP $\frac{1}{R} + j\omega C = .0001 + j.0002$

$R = \frac{1}{.0001} = 10\,000 \quad C = \frac{.0002}{1000} = 200nF$

$V_{in} = 5 \quad Z = 2000 - j4000$

$I = \frac{V}{Z} = 1.118\angle 6.34^\circ \text{ mA}$

$i(t) = 1.118\cos(1000t + 6.34^\circ) \text{ mA}$

$p(t) = v(t)\,i(t) = 5.59\cos(1000t)\cos(1000t + 6.34) \text{ mW}$

2

(1) $t\,u(t-1) + 2e^{-4t}\,u(t-1)$

$$(t-1)\,u(t-1) + u(t-1) + 2e^{-4(t-1+1)}\,u(t-1)$$

$$(t-1)\,u(t-1) + u(t-1) + 2e^{-4}\,e^{-4(t-1)}\,u(t-1)$$

$$e^{-s}\left(\frac{1}{s^2} + \frac{1}{s} + \frac{2e^{-4}}{s+4}\right)$$

(2) $$\frac{9(s+8)}{(s+8)^2+7^2} + \frac{6(4)}{(s+5)^2+4^2}$$

(3) $$\frac{s+20}{s^2+10s+21} = \frac{A}{s+3} + \frac{B}{s+7} \qquad A = \lim_{s\to -3} \frac{s+20}{s+7} = \frac{17}{4} \qquad B = \lim_{s\to -7} \frac{s+20}{s+3} = \frac{-13}{4}$$

$$\frac{17e^{-3t} - 13e^{-7t}}{4}\,u(t)$$

(4) $$\frac{s+20}{s^2+10s+34} = \frac{s+20}{(s+5)^2+(3)^2} = \frac{(s+5)+5(3)}{(s+5)^2+3^2}$$

$$e^{-5t}\left(\cos(3t) + 5\sin(3t)\right)u(t)$$

(5) $$\frac{s+20}{(s+5)^2} = \frac{(s+5)}{(s+5)^2} + \frac{15}{(s+5)^2} \rightarrow \left(e^{-5t} + 15te^{-5t}\right)u(t)$$

3

$t=0^-$

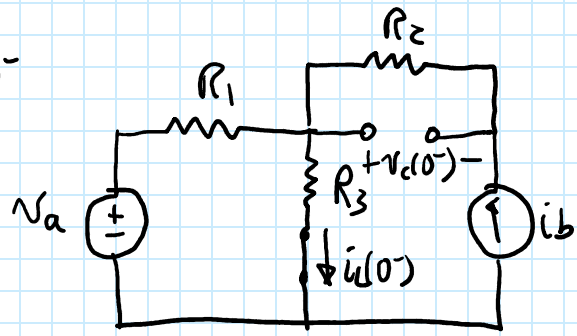

$$v_c(0^-) = -R_2 i_b$$

$$i_c(0^-) = 0$$

$$v_L(0^-) = 0$$

$$i_L(0^-) = \frac{v_a}{R_1+R_3} + i_b \frac{R_1 \| R_3}{R_3} = \frac{v_a + R_1 i_b}{R_1+R_3}$$

$t=0^+$

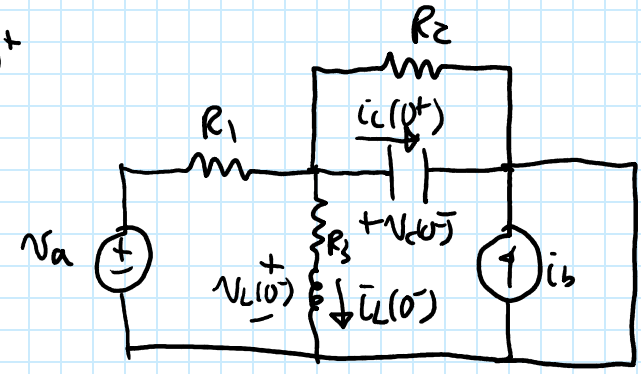

$$v_c(0^-) = v_c(0^+)$$

$$i_c(0^+) = \frac{v_a - v_c(0^-)}{R_1} - \frac{v_c(0^-)}{R_2} - i_L(0^-)$$

$$= \frac{v_a + R_2 i_b}{R_1} + i_b - \frac{(v_a + R_1 i_b)}{R_1+R_3}$$

$$= R_3 v_a + \frac{(R_1R_2 + R_2R_3 + R_1R_3)}{(R_1)(R_1+R_3)} i_b$$

$$v_L(0^-) = v_c(0^-) - R_3 i_L(0^-)$$

$$= -R_2 i_b - \frac{R_3 v_a}{R_1+R_3} - \frac{R_1 R_3 i_b}{R_1+R_3}$$

$$i_L(0^+) = i_L(0^-)$$

$t \to \infty$

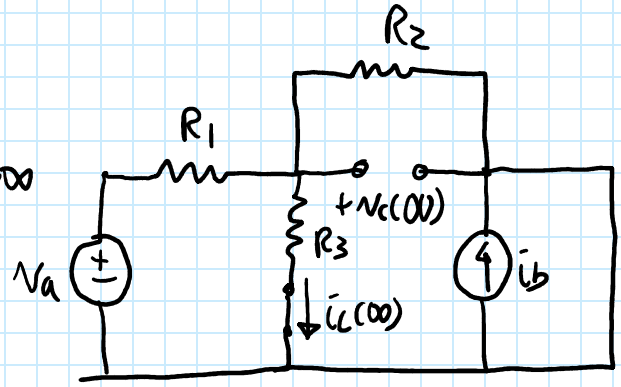

$$v_c(\infty) = \frac{(R_2 \| R_3) v_a}{R_1 + (R_2 \| R_3)}$$

$$i_c(\infty) = 0$$

$$v_L(\infty) = 0$$

$$i_c(\infty) = \frac{v_a}{R_1 + (R_2 \| R_3)} \left(\frac{R_2 \| R_3}{R_3} \right)$$

4

$t=0^-$

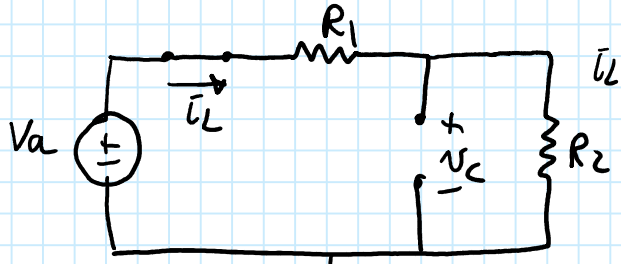

$i_L(0^-) = \frac{V_a}{R_1+R_2}$ $v_c(0^-) = \frac{V_a R_2}{R_1+R_2}$

$E = \frac{1}{2} L\, i_L^2(0^-) + \frac{1}{2}\left(v_c^2(0^-)\right)$

$t=0^+$ SAME ENERGY!

$t \to \infty$

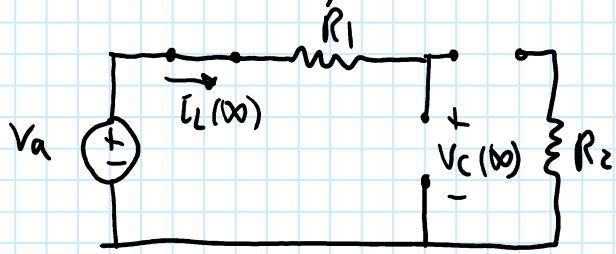

$i_L(\infty) = 0$ $V_c(\infty) = V_a$

$E = \frac{1}{2} C \left(V_c(\infty)\right)^2$

$t>0$

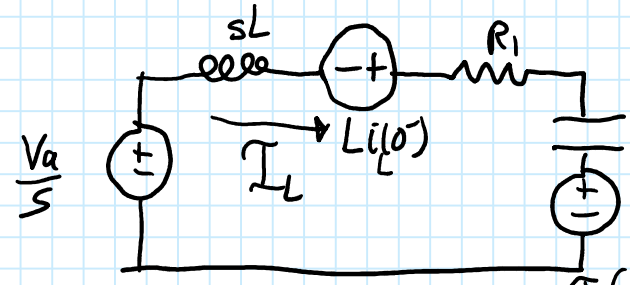

$-\frac{V_a}{s} + sLI - Li + R_1 I + \frac{I}{sC} + \frac{V_c}{s} = 0$

$\left(sL + R + \frac{1}{sC}\right) I = \frac{V_a}{s} + L\frac{V_a}{R_1+R_2} - \frac{V_a R_2}{s(R_1+R_2)}$

$I\left(\frac{s^2LC + sRC + 1}{sC}\right) = \frac{V_a R_1 + V_a sL}{s(R_1+R_2)}$

$$I = \frac{V_a(sL+R_1)C}{(s^2LC + sRC + 1)(R_1+R_2)}$$

$i_L(0) = \lim_{s\to\infty} sI = \frac{V_a C(s^2L + sR_1)}{(R_1+R_2)(s^2LC + sRC + 1)} = \frac{V_a}{R_1+R_2}$ ✓ $i_L(\infty) = \lim_{s\to 0} sI = 0$ ✓

$$I = \frac{(20)(50\cdot 10^{-9})(.01s + 1000)}{(s^2\cdot 5\cdot 10^{-10} + s\cdot 5\cdot 10^{-5} + 1)(2000)} = \frac{5\cdot 10^{-10}(.01s + 1000)}{(s^2\cdot 5\cdot 10^{-10} + s\cdot 5\cdot 10^{-5} + 1)}$$

$$I = \frac{(.01s + 1000)}{s^2 + s\cdot 10^5 + 2\cdot 10^9} = \frac{A}{s+a} + \frac{B}{s+b}$$

$$\frac{-10^5 \pm \sqrt{10^{10} - 8\cdot 10^9}}{2} = \frac{-10^5 \pm 4.4721\cdot 10^4}{2}$$

$$= -27639, -72361$$

$A = \lim_{s\to -27639} \frac{.01s+1000}{s+72361} = 0.01618$ $B = \lim_{s\to -72361} \frac{.01s+1000}{s+27639} = -0.006180$

$i_L(t) = \left(16.18e^{-27639t} - 6.18e^{-72361t}\right)u(t)$ mA!

5

v_{oc}

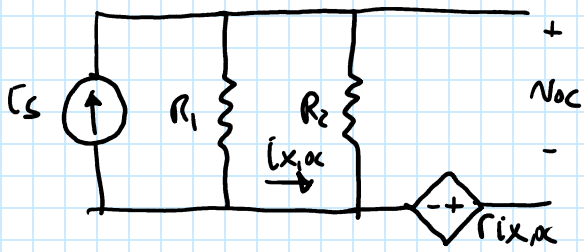

$$i_{x,oc} = -\frac{R_1 \| R_2}{R_2} i_s$$

$$v_{oc} = (R_1 \| R_2) i_s - r i_x = (R_1 \| R_2) i_s + \frac{r}{R_2}(R_1 \| R_2) i_s$$

$$= (R_1 \| R_2) i_s \left(1 + \frac{r}{R_2}\right) = \frac{R_1(R_2+r)}{R_1+R_2} i_s$$

i_{sc}

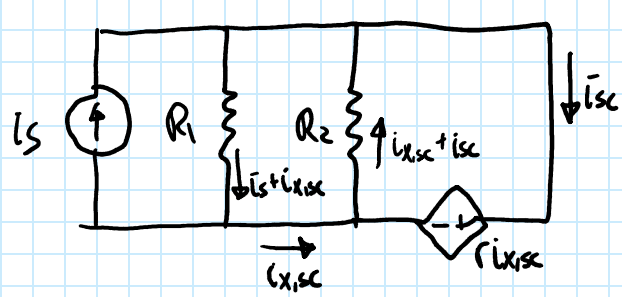

$$KVL_1 \; l_3 : R_2(i_{x,sc} + i_{sc}) + r i_{x,sc} = 0$$

$$i_{x,sc} = \frac{-R_2 i_{sc}}{R_2 + r}$$

$$KVL_1 \; l_2 : -R_1(i_s + i_{x,sc}) - R_2(i_{x,sc} + i_{sc}) = 0$$

$$= -(R_1 + R_2) i_{x,sc} - R_2 i_{sc} = R_1 i_s$$

$$\frac{(R_1+R_2)R_2 i_{sc}}{R_2 + r} - R_2 i_{sc} = R_1 i_s$$

$$(R_1 R_2 - r R_2) i_{sc} = R_1 (R_2 + r) i_s$$

$$i_{sc} = \frac{R_1(R_2+r)}{R_1 R_2 - r R_2} i_s$$

$$R_{Th} = \frac{v_{oc}}{i_{sc}} = \frac{R_1(R_2+r)}{(R_1+R_2)} \frac{R_2(R_1-r)}{R_1(R_2+r)}$$

$$= \frac{R_2(R_1 - r)}{R_1 + R_2}$$

b)

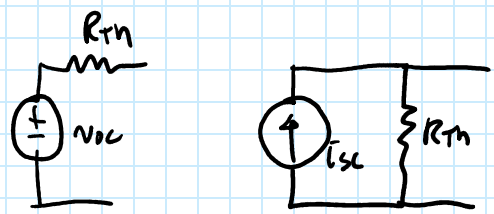

c) $R_L = R_{Th}$

$$P_{del} = \frac{v_{oc}^2}{4 R_{Th}} = \frac{i_{sc}^2 R_{Th}}{4}$$

6

(1) $G = \dfrac{4}{1 + j\frac{w}{2000}} = \dfrac{8000}{jw + 2000}$

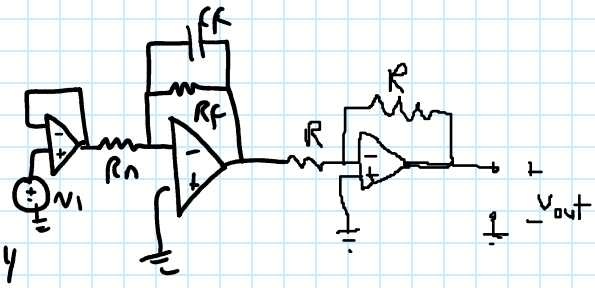

$w_{co} = \dfrac{1}{R_f C_f} = 2000$ $\quad$ $GAIN = \dfrac{R_f}{R_n} = 4$

$R_f = 5000$ $\quad$ $R_n = \dfrac{R_f}{4} = 1250\,\Omega$

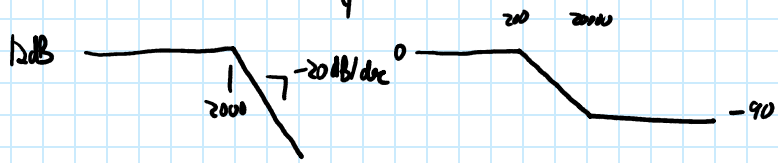

(2) $\dfrac{10}{1 + j(0.2)\left(\frac{w}{4000} - \frac{4000}{w}\right)}$ or $\dfrac{10 \cdot 20000 \cdot jw}{(jw)^2 + 20000 \cdot jw + 16000000}$

$\zeta = \dfrac{1}{2Q} = 2.5$ $\quad$ $BW = 2\zeta w_n = 20000$

$w_{cen,lin} = w_n\sqrt{1+\zeta^2} = 10770$

$w_{cutoff} = w_{cen,lin} \pm BW/2 = 770,\ 20770$

7

(1)

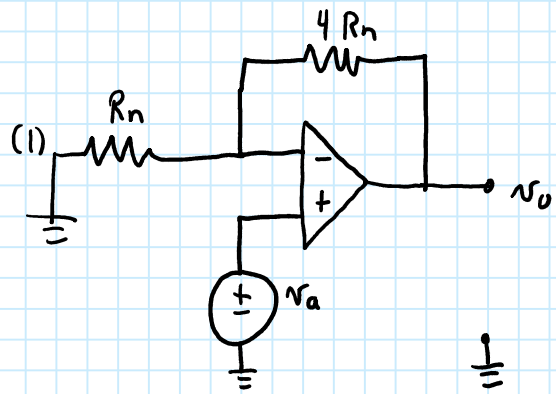

(2)

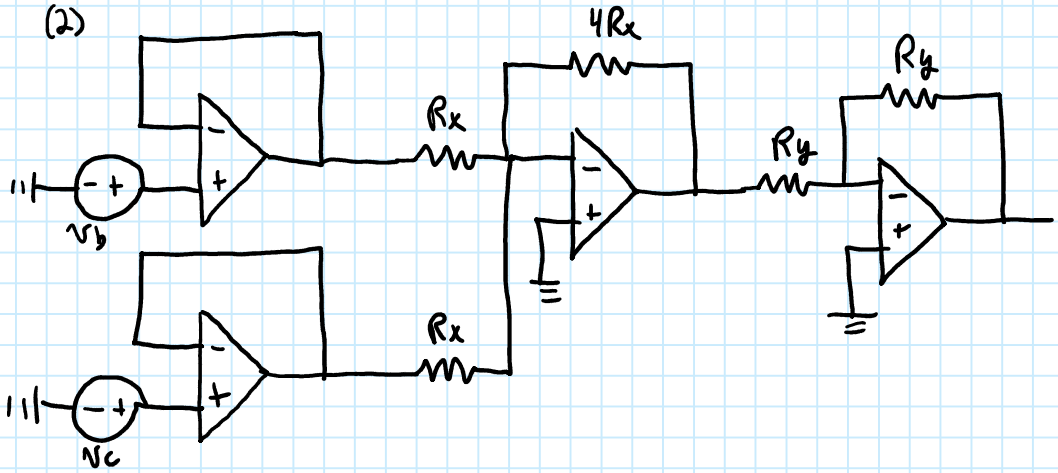

(3) $Z_{f1} = R_3 \quad Z_{n1} = R_1 + \frac{1}{sC_1} = \frac{sR_1C_1+1}{sC_1} \quad H_1 = \frac{-sR_3C_1}{sR_1C_1+1}$ HPF

$Z_{f2} = R_y \quad Z_{n2} = \frac{\frac{R_2}{sC_2}}{R_2 + \frac{1}{sC_2}} = \frac{R_2}{sR_2C_2+1} \quad H_2 = \frac{-R_2}{R_y(sR_2C_2+1)}$ LPF

$H_3 = H_1 H_2 = \frac{sR_2R_3C_1}{R_y(sR_1C_1+1)(sR_2C_2+1)}$ BPF